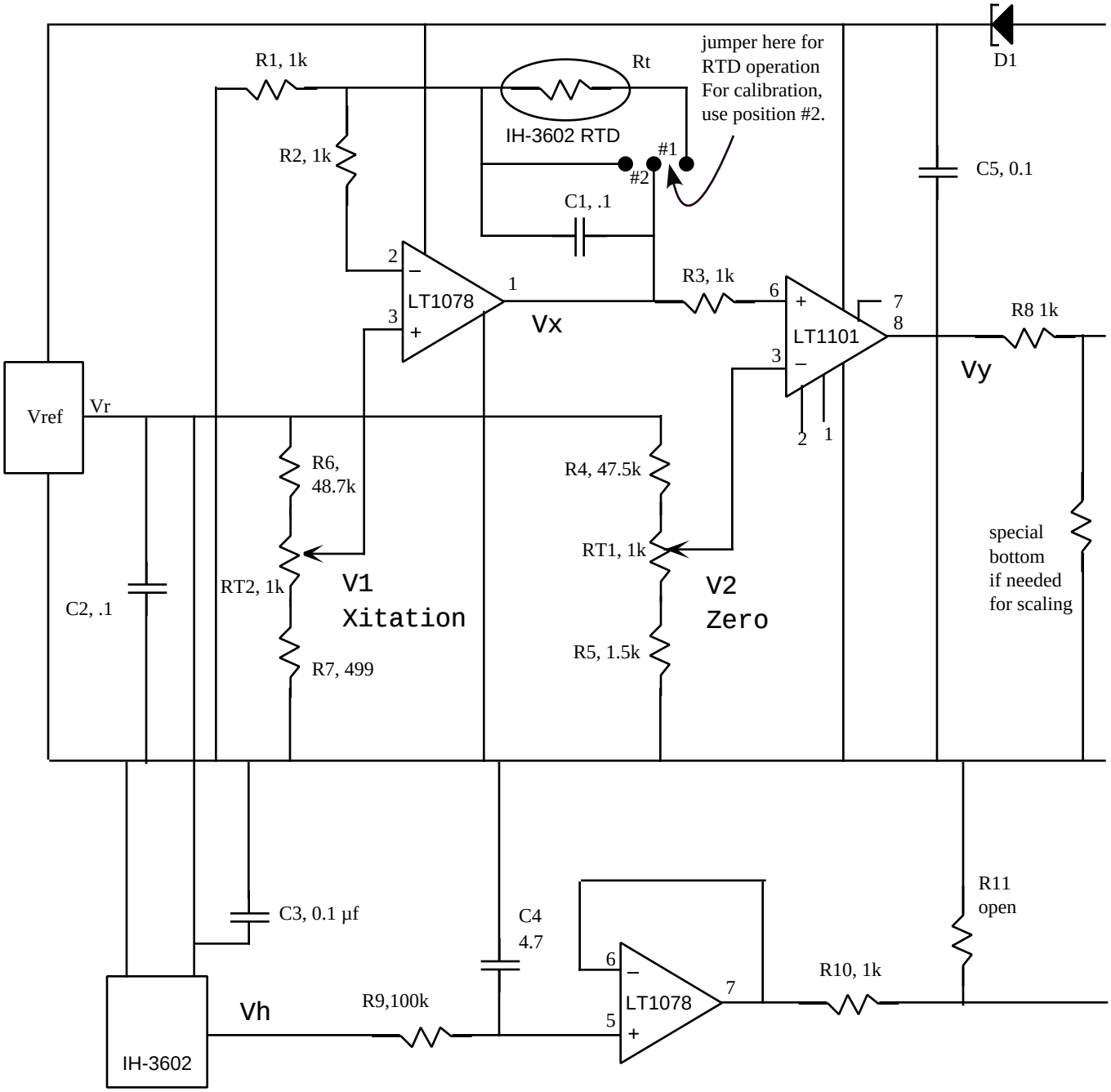

IH-3602 top view

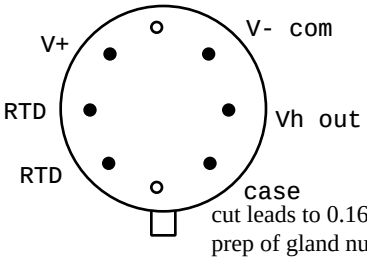

cut leads to 0.160 for socket
prep of gland nut
drill base 19/64"
drill cap 11/32"

1121-5 bottom view

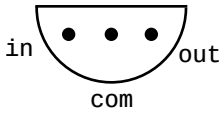

RHTD conditioner
Hycal IH-3602 humidity + 1000Ω RTD

mod: 25-Feb-97

RHTD calibration, for -25 to +100 °C===> 0 to 5 volt
0.040 volts per °C... °C=(volts/0.04) - 25
0.00 volts @ -25 °C
0.120 volts @-22°C,
1.0 volts at 0°C.
3.0 volts at 50°C
5.0 volts at 100°C

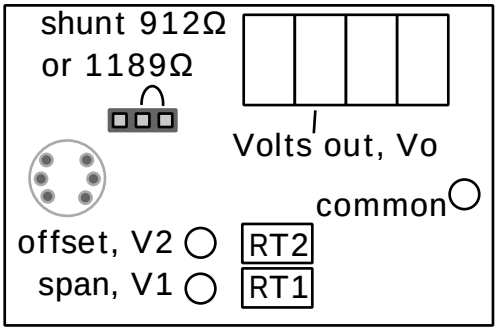

equipment:
4.5 digit voltmeter
912Ω shunt (RTD resistance at -22 °C)
1189Ω shunt (RTD resistance at +50 °C)

STEPS

1) voltmeter to V1 (excitation), adjust to 0.106 volt using RT1 (span trimmer)
2) voltmeter to V2 (offset), adjust to 0.202 volt using RT2 (offset trimmer)

3) install 912Ω shunt in circuit in place of RTD
4) voltmeter to Vo (output green terminal), adjust to 0.120 volt using RT2.

5) install 1189Ω shunt in place of RTD
6) measure the new output voltage Vo.

7) Calculate a new excitation voltage:
Vx=V1 * 2.880 / (Vo - 0.120)
The value V1 comes from step 1 initially, or from step 8 in the second iteration
The value Vo comes from the measurement in step 6
8) voltmeter to V1 (excitation), adjust V1 to this calculated value, Vx

9) voltmeter to Vo (output), adjust Vo to 3.00 volt using RT2 (offset)
10) return to step 3. The calibration is complete when the output reads 0.120 volts with the 912Ω shunt and 3.0 volts with the 1189Ω shunt.

For a recalibration, skip steps 1 and 2, but measure V1 to begin with, to use in the calculation in step 7.